Features:
1.It is designed with straight through bore type with rising stem, outside screw & yoke, bolted bonnet and stainless steel trim. The open and closed position of the valve is easily distinguished by the stem position.
2.This valve can be installed in horizontal and vertical positions in the piping systems.
3. The torque for opening and closing is small, so it is easy to open or close reliably and quickly.

4.It allows for two-way flow direction and used for closing or opening the medium flow.
5.The wedge is replaceable without needing to remove the valve from the pipelines.
6. Compact structure, good sealing performance.
7.Simple shape, good casting process, widely used.

Gate Valve

Size: DN50-DN600（1.5"-16")
Standard:
1: Design and manufacture: DIN 3352
2: Test and inspection: EN12266 API 598
3: Face to face(end to end): DIN3202 F4/F5
4:Flanged connection: DIN/BS/ISO/EN ,PN10/16,ANSI B16.5,CLASS150,JIS 10K,AS2129 D/E ,BS D/E
(1) Please confirm the F-F dimension before order
(2) DN40-DN350 the seat with phenolic resin backup,above DN350 the seat backup is aluminum
Application:
It is widely used in process industries such as palm oil and refinery plant, fire protection system and cooling system,tap water industry, sewage treatment, shipping construction, petroleum, chemicals, food, pharmacy, textile, electric power, metallurgy and energy system's pipeline to adjust and shut off fluids.
Working Pressure:10bar/16bar
Testing Pressure: Shell: 15bar/24bar Seal: 11bar/17.6bar

5005 5007 5014 5015 5017 5018 5021 6016 6021 3013 3014 1023



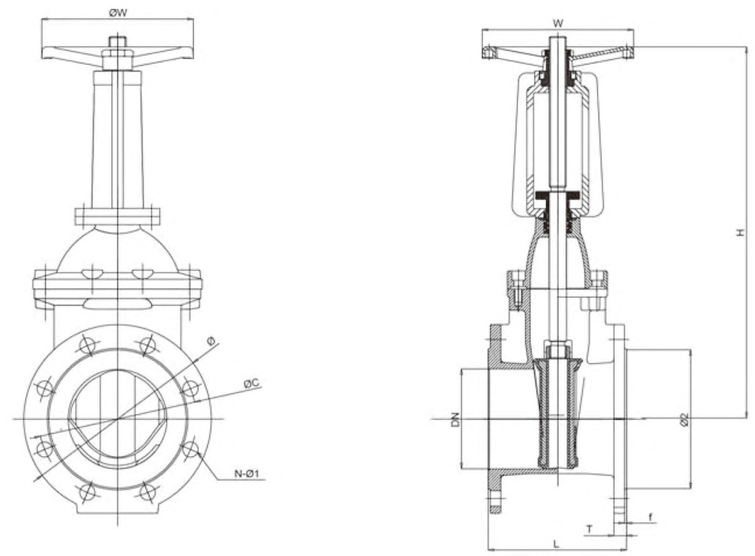


| Name | Material | Specification ASTM |
|---|---|---|
| Body | Ductile Iron | |
| Disc | Ductile Iron +EPDM | ASTM A536 |
| | Ductile Iron +NBR | |
| Stem | Stainless Steel | A276-410 |
| Nut | Bronze | |
| Packing | EPDM<br>NBR | |
| Stand | Ductile Iron | ASTM A536 |

Connecting dimensions(End flange DIN3352 PN10) (Unit:mm)

| DN mm | L mm F4 | L mm F5 | H mm | W mm | 1.0 MPa Ø | 1.0 MPa ØC | 1.0 MPa Ø2 | 1.0 MPa f | 1.0 MPa T | 1.0 MPa n-d | 1.6 MPa ØC | 1.6 MPa Ø2 | 1.6 MPa f | 1.6 MPa T | 1.6 MPa n-d |
|---|---|---|---|---|---|---|---|---|---|---|---|---|---|---|---|
| 40 | 140 | 240 | 301 | 180 | 150 | 110 | 84 | 3 | 18 | 4-19 | 110 | 84 | 3 | 18 | 4-19 |
| 50 | 150 | 250 | 312 | 180 | 165 | 125 | 99 | 3 | 19 | 4-19 | 125 | 99 | 3 | 19 | 4-19 |
| 65 | 170 | 270 | 337 | 180 | 185 | 145 | 119 | 3 | 19 | 4-19 | 145 | 119 | 3 | 19 | 4-19 |
| 80 | 180 | 280 | 403 | 200 | 200 | 160 | 133 | 3 | 19 | 8-19 | 160 | 133 | 3 | 19 | 8-19 |
| 100 | 190 | 300 | 434 | 200 | 220 | 180 | 154 | 3 | 19 | 8-19 | 180 | 154 | 3 | 19 | 8-19 |
| 125 | 200 | 325 | 536 | 250 | 250 | 210 | 184 | 3 | 19 | 8-19 | 210 | 184 | 3 | 19 | 8-19 |
| 150 | 210 | 350 | 577 | 250 | 285 | 240 | 210 | 3 | 19 | 8-23 | 240 | 210 | 3 | 19 | 8-23 |
| 200 | 230 | 400 | 630 | 320 | 340 | 295 | 265 | 3 | 20 | 8-23 | 295 | 265 | 3 | 20 | 12-23 |
| 250 | 250 | 450 | 862 | 380 | 405 | 350 | 319 | 3 | 22 | 12-23 | 355 | 319 | 3 | 22 | 12-28 |
| 300 | 270 | 500 | 991 | 380 | 460 | 400 | 370 | 4 | 24.5 | 12-23 | 410 | 370 | 4 | 24.5 | 12-28 |
| 350 | 290 | 550 | 1164 | 450 | 520 | 460 | 429 | 4 | 26.5 | 16-23 | 470 | 429 | 4 | 26.5 | 16-28 |
| 400 | 310 | 600 | 1284 | 450 | 580 | 515 | 480 | 4 | 28 | 16-28 | 525 | 480 | 4 | 28 | 16-31 |

Gate Valve

Gate Valve


Features:
1.Flat plate design, floating seats, bypass design, all lead to lower operating torque.
2.The sealing surface of the valve adopts abrasion-resistant and anti-corrosive materials which can lengthen the performance life of the valve.
3.The wedge is replaceable without needing to remove the valve from the pipelines.
4.It is designed with straight through bore type with non-rising stem, inside screw and bolted bonnet. This valve provides positive shutoff with minimal pressure drop and flow turbulence.

5.This gate valve allows for two-way flow direction and used for closing or opening the medium flow. This valve can be installed in horizontal and vertical positions in the piping systems.
6.The valve adopts full-shut structure which has good protection function and can be used in all weather.
7.Can use all sorts of piping flange standards and flange seal face form, meet various needs of the project and use requirements.

Size: DN50-DN600 (2"-24")
Standard:

1: Design and manufacture: DIN3352
2: Test and inspection: EN12266
3: Face to face(end to end): DIN3352 F4,DIN3352 F5
4: Flanged connection: DIN 2501 PN10&PN16

Application:
It is widely used in process industries such as palm oil and refinery plant, fire protection system and cooling system,tap water industry, sewage treatment, shipping construction, petroleum, chemicals, food, pharmacy, textile, electric power, metallurgy and energy system's pipeline to adjust and shut off fluids.
Working Pressure:10bar/16bar
Testing Pressure:
Shell: 15bar/24bar
Seal: 11bar/17.6bar

5005 5007 5014 5015 5017 5018 5021 6016 6021 3013 3014 1023



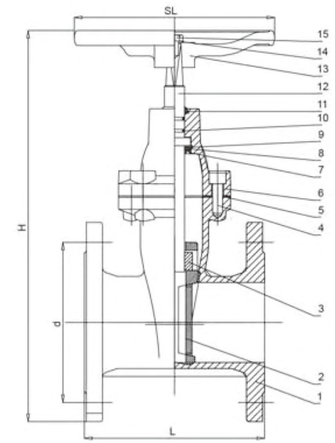


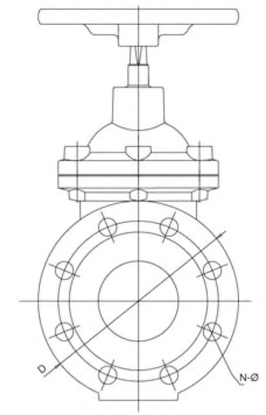


| Name | Material | Specification |
|---|---|---|
| | | ASTM |
| Body | Cast Iron | ASTM A126B |
| | Ductile Iron | ASTM A536 |
| Disc | Ductile Iron | ASTM A536 |
| Stem mut | Carbon Steel | A216 WCB |
| Bolt | Carbon Steel | A216 WCB |
| Washer | NBR | |
| Bonnet | Ductile Iron | ASTM A536 |
| O-ring | EPDM | |
| Washer | NBR | |
| Conca | Carbon Steel | A216 WCB |
| O-ring | EPDM | |
| Dust-ring | EPDM | |
| Stem | Stainless Steel | A276-410 |
| Hand wheel | Ductile Iron | ASTM A536 |
| Washer | Carbon Steel | A216 WCB |
| Bolt | Carbon Steel | A216 WCB |

★ Other special material requested, please contact us directly.

Connecting dimensions (Unit:mm)

| SIZE | Dimensions L:DIN3352,F4/F5 | | | | | DIN2501 PN16 | | DIN2501 PN10 | |
|---|---|---|---|---|---|---|---|---|---|
| | L(F4) | L(F5) | D | H | SL | d | N-Ø | d | N-Ø |
| DN50 | 150 | 250 | 165 | 320 | 145 | 125 | 4-18 | 125 | 4-18 |
| DN65 | 170 | 270 | 185 | 360 | 145 | 145 | 4-18 | 145 | 4-18 |
| DN80 | 180 | 280 | 200 | 390 | 175 | 160 | 8-18 | 160 | 8-18 |
| DN100 | 190 | 300 | 220 | 450 | 175 | 180 | 8-18 | 180 | 8-18 |
| DN125 | 200 | 325 | 250 | 490 | 245 | 210 | 8-18 | 210 | 8-18 |
| DN150 | 210 | 350 | 285 | 560 | 245 | 240 | 8-23 | 240 | 8-23 |
| DN200 | 230 | 400 | 340 | 660 | 295 | 295 | 12-23 | 295 | 8-23 |
| DN250 | 250 | 450 | 405 | 760 | 355 | 355 | 12-27 | 350 | 12-22 |
| DN300 | 270 | 500 | 460 | 850 | 355 | 410 | 12-27 | 400 | 12-22 |
| DN350 | 290 | 550 | 520 | 1100 | 460 | 470 | 16-27 | 460 | 16-22 |
| DN400 | 310 | 600 | 580 | 1200 | 500 | 525 | 16-30 | 515 | 16-26 |
| DN500 | 350 | 700 | 715 | 1480 | 550 | 650 | 20-30 | 620 | 20-26 |
| DN600 | 390 | 800 | 840 | 1608 | 550 | 770 | 20-36 | 725 | 20-30 |



Gate Valve

## ■结构及用途 Structure and purpose

该产品是引进欧洲高科技橡胶及阀门制造技术生产的，克服了橡胶老化及生锈等缺陷。该阀利用弹性闸板产生微量弹性变形的补偿作用达到良好的密封效果，该阀具有开关轻巧、密封可靠、弹性记忆佳及使用寿命长等显著优点，产品广泛用于自来水、污水、海水、水处理、环保、建筑、石油、化工、电力、食品、医药、轻纺、船舶、能源等行业管路线上作为调节和截流装置作用。

This product is made by means of importing the high-tech rubber and the know-how of vave manufacture of Europe and overcomes the defectives as rubber aging and rust etc. It uses the compensating action from the micro-deformation of elasticity produced by the elastic gate plate to get the good sealing effect and features the advantages of light on-off, reliable sealing, good memory of elasticity, long duration and so on. It can be used as the adjust and shut off device on the pipeline in tap water,sewage, seawater, water treatment, environmentai protection, construction, petroleum, chemical industry, electric power,food medicine, light & textile industry, ship, energy source and industry.

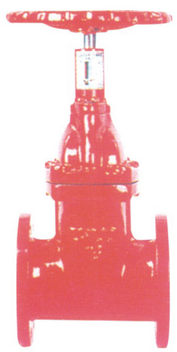

RIHX 附传动帽非升杆式弹性座封闸阀
RIHX Opening indication elastic-seat encolsed Gate valve

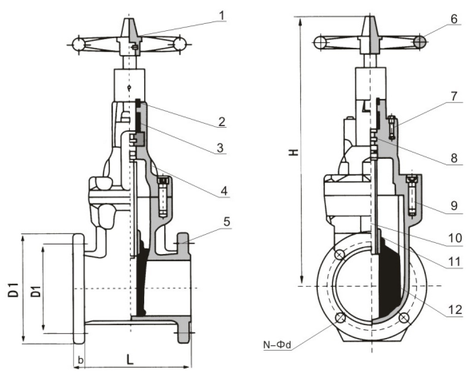


RVCX附传动帽非升杆式弹性座封闸阀
RVCX non-lift rod elastic seat ring sealed gate valve attached with actuating cap

RVHX附手轮非升杆式弹性座封闸阀
RVHX non-lift rod elastic seat ring sealed gate valve attached with handwheel

RSHX非升杆式带信号弹性座封闸阀
RSHX non-lift rod electric elastic seat ring sealed gate valve

RSEX非升杆式弹性座封闸阀
RSEX non-lift rod signal elastic seat ring sealed gate valve, elastic gate valve attached

## ■主要外形及连接尺寸 Main external and connelting dimensions

PN10/16

| 公称通径 Nominal diameter | | L | D | $D_1$ | b | n-Φ$d_1$ | H |
|---|---|---|---|---|---|---|---|
| mm | in | | | | | | |
| 50 | 2" | 178 | 160 | 125 | 20 | 4-18 | 245 |
| 65 | 21/2" | 190 | 180 | 145 | 20 | 4-18 | 275 |
| 80 | 3" | 203 | 195 | 160 | 21 | 4-18/8-18 | 305 |
| 100 | 4" | 229 | 215 | 180 | 21 | 8-18 | 330 |
| 125 | 5" | 254 | 245 | 210 | 22 | 8-18 | 375 |
| 150 | 6" | 267 | 285 | 240 | 22 | 8-23 | 415 |
| 200 | 8" | 292 | 335 | 295 | 23 | 8-23/12-23 | 510 |
| 250 | 10" | 330 | 390/405 | 350/355 | 24 | 12-23/12-25 | 620 |
| 300 | 12" | 356 | 440/460 | 400/410 | 25 | 12-25/12-25 | 700 |
| 350 | 14" | 381 | 500/520 | 460/470 | 26 | 16-23/16-25 | 785 |
| 400 | 16" | 406 | 565/580 | 515/525 | 40 | 16-25/16-30 | 855 |
| 450 | 18" | 432 | 615/640 | 565/585 | 44 | 20-25/20-30 | 950 |
| 500 | 20" | 457 | 670/705 | 620/650 | 46 | 20-25/20-34 | 1050 |
| 600 | 24" | 508 | 780/840 | 725/770 | 54 | 20-30/20-41 | 1200 |

注：① 以上法兰尺寸按国标；② 并可按BS5163与DIN3352及JIS5527标准制造。
Note: ① The external dimensions above are per GB(the national standard). ② Manufacture per Bs5163, DIN3352and JIS5527 is also available.

RVHS 升杆式弹性座封闸阀
RVHS Lift rod type elastic-seat encolsed gate valve

RRHX 升杆式弹性座封闸阀
RRHX lift rod elastic seat ring sealed gate valve

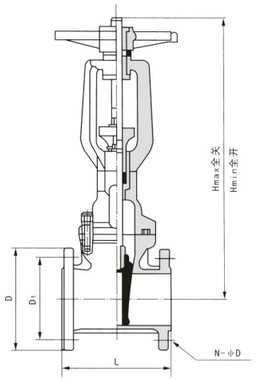


## ■主要技术参数 Main technique number

| 公称压力PN(mm) Nominal pressure | | 1.0 | 1.6 | 2.5 |
|---|---|---|---|---|
| 试验压力 Test pressure (MPa) | 壳体强度 Shell strength | 1.5 | 2.4 | 2.8 |
| | 密封性能 Sealing performance | 1.1 | 1.76 | 3.8 |
| 工作温度(℃) Working temperature | | -10~80 | | |
| 适用介质 Applicable medium | | 清水Clean-water、污水Slops、油Oil、气Air | | |

## ■主要零件材料 Material for main parts

| 零件名称 Name of parts | 材 质 Material |
|---|---|
| 阀体 Body、阀盖 Bonnet | 球墨铸铁Ductile Iron |
| 闸 板 Disc | 球墨铸铁(覆印EPDM或MBR) Ductile Iron |
| 阀 杆 Stem | 不锈钢 Stainless steel |
| 螺 母 Nut | 铜 Bronze |
| 手 轮 Hand wheel | 球墨铸铁 Ductile Iron |

## ■主要外型尺寸 Main external dimensions

PN10/PN16

| 公称通径 Nominal diameter DN(mm) | L | D | $D_1$ | N-Φd | b | Hmin (全关) | Hmax (全开) |
|---|---|---|---|---|---|---|---|
| 50 | 178 | 160 | 125 | 4-18 | 20 | 322 | 374 |
| 65 | 190 | 180 | 145 | 4-18 | 20 | 332 | 398 |
| 80 | 203 | 195 | 160 | 4-18/8-18 | 21 | 350 | 429 |
| 100 | 229 | 215 | 180 | 8-18 | 21 | 420 | 524 |
| 125 | 254 | 245 | 210 | 8-18 | 22 | 581 | 721 |
| 150 | 267 | 285 | 240 | 8-23 | 22 | 581 | 736 |
| 200 | 292 | 335 | 295 | 8-23/12-23 | 23 | 736 | 942 |
| 250 | 330 | 390/405 | 350/355 | 12-23/12-25 | 24 | 882 | 1013 |
| 300 | 356 | 440/460 | 400/410 | 12-23/12-25 | 5 | 1009 | 1117 |
| 350 | 381 | 500/520 | 460/470 | 16-23/16-25 | 26 | 1300 | 1655 |
| 400 | 406 | 565/580 | 515/525 | 16-25/16-30 | 40 | 1380 | 1805 |
| 450 | 432 | 615/640 | 565/585 | 20-25/20-30 | 44 | 1470 | 2020 |
| 500 | 457 | 670/705 | 620/650 | 20-25/20-34 | 46 | 1600 | 2240 |
| 600 | 508 | 780/840 | 725/770 | 20-30/20-41 | 54 | 1705 | 2500 |

# API闸阀

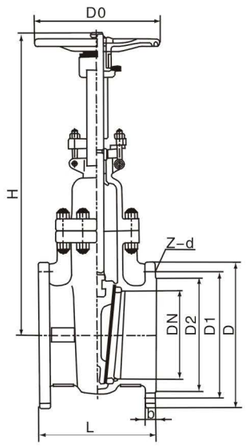


API-150Lb

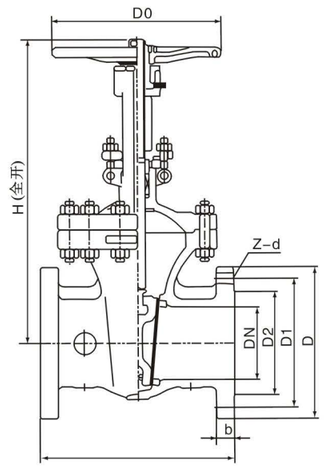


API300Lb、600Lb、900Lb、1500Lb、2500Lb

## ■产品制造及验收技术标准 Vatve manufacture and standard

1.设计标准按API 600　　Design standard API 600

2.结构长度按API B16.10　　Face to face API B16.10

3.法兰标准按API B16.5　　Flange standard API B16.5

4.试验标准按API 598　　Test standard API 598

## ■主要性能规范 Chief propertg and specification

| 试验压力 Test pressure | 公称压力(Lb)Nominal pressure | | | | | | 适用介质 Applicable medium | 适用温度(℃) Applicable temperature |
|---|---|---|---|---|---|---|---|---|
| | 150 | 300 | 600 | 900 | 1500 | 2500 | | |
| 壳体强度试验 Shell strength test | 3 | 7.8 | 15.4 | 23.1 | 38.4 | 64.6 | 水、蒸汽、油品 Water steam oil | ≤425℃ |
| 密封试验(液)(liquid) Seal test | 2.2 | 5.6 | 11.2 | 16.8 | 28.1 | 47.7 | | |
| 密封试验(气)(air) Seal test | 0.5~0.7 | | | | | | | |

## ■主要零件材料 Material for main parts

| 阀体材料 Material of valve | WCB(C) | CF8(P) | CF8M(R) | WC6 WC9(V) | CF3(P) | CF3M(R) |
|---|---|---|---|---|---|---|
| 工作温度(℃) Working temperature | ≤425 | ≤275 | ≤275 | ≤550 | ≤200 | ≤200 |
| 适用介质 Applicable medium | 水、蒸汽、油品 Water, steam, oil | 硝酸类 Nitric acid | 醋酸类 Acetic acid | 水、蒸汽 Water, steam | 酸碱 Acid alkali | 酸碱 Acid alkali |

## ■主要连接及外形尺寸 Main connection and external dimensions

(mm)

**API 150Lb**

| 公称通径 DN(mm) Nominal diameter in | mm | 单位 Unit | L | H(全开) Open | D | $D_1$ | $D_2$ | b | z-Φd | $D_0$ |
|---|---|---|---|---|---|---|---|---|---|---|
| 2" | 50 | in | 7.00 | 16.10 | 6.00 | 4.75 | 3.62 | 0.75 | 4-Φ0.75 | 8.00 |
| | | mm | 178 | 409 | 152 | 120.5 | 92 | 19.1 | 4-Φ19 | 200 |
| 3" | 80 | in | 8.00 | 20.00 | 7.5 | 6.00 | 5.00 | 0.94 | 4-Φ0.75 | 10.00 |
| | | mm | 203 | 570 | 190 | 152.5 | 127 | 23.9 | 4-Φ19 | 250 |
| 4' | 100 | in | 9.00 | 23.20 | 9.00 | 7.50 | 6.19 | 0.94 | 8-Φ0.75 | 10.00 |
| | | mm | 229 | 590 | 229 | 190.5 | 157 | 23.9 | 8-Φ19 | 250 |
| 6" | 150 | in | 10.50 | 24.80 | 11.00 | 9.50 | 8.50 | 1.00 | 8-Φ0.88 | 12.00 |
| | | mm | 267 | 630 | 279 | 241.5 | 216 | 25.4 | 8-Φ22 | 300 |
| 8" | 200 | in | 11.50 | 37.80 | 13.50 | 11.75 | 10.62 | 1.12 | 8-Φ0.88 | 13.88 |
| | | mm | 292 | 960 | 343 | 298.5 | 270 | 28.5 | 8-Φ22 | 350 |
| 10" | 250 | in | 13.00 | 45.6 | 16.00 | 14.25 | 12.75 | 1.19 | 12-Φ1.00 | 15.70 |
| | | mm | 330 | 1158 | 406 | 362 | 324 | 30.2 | 12-Φ25 | 400 |
| 12" | 300 | in | 14.00 | 54.30 | 19.00 | 17.00 | 15.00 | 1.25 | 12-Φ1.00 | 17.70 |
| | | mm | 356 | 1378 | 483 | 432 | 381 | 31.8 | 12-Φ25 | 450 |
| 14" | 350 | in | 15.00 | 60.75 | 21.00 | 18.75 | 16.25 | 1.38 | 12-Φ1.12 | 19.7 |
| | | mm | 381 | 1543 | 533 | 476.5 | 413 | 35 | 12-Φ29 | 500 |
| 16" | 400 | in | 16.00 | 68.40 | 23.50 | 21.25 | 18.50 | 1.44 | 16-Φ1.12 | 23.60 |
| | | mm | 406 | 1738 | 597 | 539.5 | 47 | 36.6 | 16-Φ29 | 600 |
| 18" | 450 | in | 17.00 | 71.10 | 25.00 | 22.75 | 21.00 | 1.56 | 16-Φ1.25 | 23.60 |
| | | mm | 432 | 1959 | 635 | 578 | 533 | 39.7 | 16-Φ32 | 600 |
| 20" | 500 | in | 18.00 | 87.20 | 27.5 | 25.00 | 23.00 | 1.69 | 20-Φ1.25 | 26.80 |
| | | mm | 457 | 2214 | 698 | 635 | 584 | 42.9 | 20-Φ32 | 680 |
| 24" | 600 | in | 20.00 | 102.3 | 32.00 | 29.50 | 27.25 | 1.88 | 20-Φ1.38 | 29.90 |
| | | mm | 508 | 2599 | 813 | 749.5 | 692 | 47.7 | 20-Φ35 | 760 |
| 30" | 750 | in | 24.00 | 125.3 | 38.75 | 36.00 | 33.75 | 2.94 | 28-Φ1.38 | 36.00 |
| | | mm | 610 | 3183 | 985 | 914 | 857 | 74.5 | 28-Φ35 | 915 |
| 36" | 900 | in | 28.00 | 147.00 | 46.00 | 42.75 | 40.25 | 3.56 | 32-Φ1.62 | 36.00 |
| | | mm | 711 | 3737 | 1170 | 1086 | 1022 | 90.5 | 32-Φ41 | 915 |

**API 300Lb**

| 公称通径 DN(mm) Nominal diameter in | mm | 单位 Unit | L | H(全开) Open | D | $D_1$ | $D_2$ | b | z-Φd | $D_0$ |
|---|---|---|---|---|---|---|---|---|---|---|
| 2" | 50 | in | 8.5 | 16.7 | 6.50 | 5.00 | 3.62 | 0.88 | 8-Φ0.75 | 8.0 |
| | | mm | 216 | 424 | 165 | 127 | 92 | 22.3 | 8-Φ19 | 200 |
| 3" | 80 | in | 11.15 | 21.00 | 8.25 | 6.62 | 5.0 | 1.12 | 8-Φ0.88 | 10 |
| | | mm | 283 | 535 | 210 | 168 | 127 | 28.5 | 8-Φ22 | 250 |
| 4' | 100 | in | 12.00 | 24.20 | 10.0 | 7.88 | 6.19 | 1.25 | 8-Φ0.88 | 10 |
| | | mm | 305 | 615 | 254 | 200 | 157.2 | 31.8 | 8-Φ22 | 250 |
| 6" | 150 | in | 15.87 | 31.30 | 12.50 | 10.62 | 8.5 | 1.44 | 12-Φ0.88 | 14 |
| | | mm | 403 | 795 | 318 | 270 | 216 | 36.6 | 12-Φ22 | 350 |
| 8" | 200 | in | 16.50 | 39.90 | 15.0 | 13.0 | 10.62 | 1.62 | 12-Φ1.0 | 15.7 |
| | | mm | 419 | 1012 | 381 | 330 | 270 | 41.3 | 12-Φ25 | 400 |
| 10" | 250 | in | 18.00 | 48.50 | 17.50 | 15.52 | 12.75 | 1.88 | 16-Φ1.12 | 17.7 |
| | | mm | 457 | 1231 | 444 | 387.5 | 324 | 47.7 | 16-Φ29 | 450 |
| 12" | 300 | in | 19.75 | 57.0 | 20.50 | 17.75 | 15.0 | 2.00 | 16-Φ1.25 | 19.7 |
| | | mm | 502 | 1450 | 521 | 451 | 381 | 50.8 | 16-Φ32 | 500 |
| 14" | 350 | in | 30.00 | 64.80 | 23.00 | 20.25 | 16.25 | 2.12 | 20-Φ1.25 | 23.6 |
| | | mm | 762 | 1645 | 584 | 514.5 | 413 | 54.0 | 20-Φ32 | 600 |
| 16" | 400 | in | 33.00 | 72.50 | 25.50 | 20.25 | 18.5 | 2.25 | 20-Φ1.38 | 23.6 |
| | | mm | 838 | 1841 | 648 | 571.5 | 470 | 57.2 | 20-Φ35 | 600 |
| 18" | 450 | in | 36.00 | 76.50 | 28.00 | 24.75 | 21 | 2.38 | 24-Φ1.38 | 26.8 |
| | | mm | 914 | 1943 | 711 | 628.5 | 533 | 60.4 | 24-Φ35 | 680 |
| 20" | 500 | in | 39.00 | 84.80 | 30.50 | 27.0 | 23.0 | 2.50 | 24-Φ1.38 | 38 |
| | | mm | 991 | 2154 | 775 | 686 | 584 | 63.5 | 24-Φ35 | 760 |
| 24" | 600 | in | 45.00 | 100.50 | 36.0 | 32.0 | 27.25 | 2.75 | 24-Φ1.62 | 36 |
| | | mm | 1143 | 2553 | 914 | 813 | 692 | 69.9 | 24-Φ41 | 915 |

# API闸阀

## ■主要连接及外形尺寸 Main connection and external dimensions

(mm)

| API 600Lb | | | | | | | | | | |
|---|---|---|---|---|---|---|---|---|---|---|
| 公称通径 DN(mm) Nominal diameter | | 单位 Unit | L | H(全开) Open | D | $D_1$ | $D_2$ | b | z-Φd | $D_0$ |
| in | mm | | | | | | | | | |
| 2" | 50 | in | 11.50 | 18 | 6.5 | 5.00 | 3.62 | 1.0 | 8-Φ0.75 | 10 |
| | | mm | 292 | 458 | 165 | 127 | 92 | 25.4 | 8-Φ19 | 250 |
| 3" | 80 | in | 14.00 | 22.58 | 8.25 | 6.62 | 5.00 | 1.25 | 8-Φ0.88 | 10 |
| | | mm | 356 | 570 | 210 | 168 | 127 | 31.8 | 8-Φ22 | 250 |
| 4' | 100 | in | 17.00 | 27.2 | 10.75 | 8.50 | 6.19 | 1.5 | 8-Φ1.0 | 14 |
| | | mm | 432 | 690 | 273 | 216 | 157 | 38.1 | 8-Φ25 | 350 |
| 6" | 150 | in | 22 | 35.8 | 14 | 11.50 | 8.50 | 1.88 | 12-Φ1.12 | 18 |
| | | mm | 559 | 910 | 356 | 292 | 216 | 47.7 | 12-Φ29 | 450 |
| 8" | 200 | in | 26.00 | 41.9 | 16.5 | 13.75 | 10.62 | 201.9 | 12-Φ1.25 | 19.7 |
| | | mm | 600 | 1064 | 419 | 349 | 270 | 55.6 | 12-Φ32 | 500 |
| 10" | 250 | in | 31.00 | 49.5 | 20 | 17.00 | 12.75 | 2.5 | 16-Φ1.38 | 23.6 |
| | | mm | 787 | 1257 | 508 | 432 | 324 | 63.5 | 16-Φ35 | 600 |
| 12" | 300 | in | 33 | 57.8 | 22 | 19.25 | 15.00 | 2.62 | 20-Φ1.38 | 26.8 |
| | | mm | 838 | 1468 | 559 | 489 | 381 | 66.7 | 20-Φ35 | 680 |
| 14" | 350 | in | 35 | 63.9 | 23.75 | 20.75 | 16.25 | 2.75 | 20-Φ1.50 | 26.9 |
| | | mm | 889 | 1623 | 603 | 527 | 413 | 69.9 | 20-Φ38 | 760 |
| 16" | 400 | in | 39 | 71.5 | 27 | 23.75 | 18.5 | 3.0 | 20-Φ1.62 | 26.9 |
| | | mm | 991 | 1816 | 686 | 603 | 470 | 76.2 | 20-Φ41 | 760 |
| 18" | 450 | in | 43 | 82.7 | 29.25 | 25.75 | 21.00 | 3.25 | 20-Φ10.75 | 36 |
| | | mm | 1092 | 2100 | 743 | 654 | 533 | 82.6 | 20-Φ45 | 915 |
| 20" | 500 | in | 47 | 88.6 | 32 | 28.5 | 23.00 | 3.5 | 24-Φ1.75 | 37.4 |
| | | mm | 1194 | 2250 | 813 | 724 | 584 | 88.9 | 24-Φ45 | 950 |
| 24" | 600 | in | 55 | 107.5 | 37 | 33.0 | 27.25 | 4.0 | 24-Φ2.0 | 39.4 |
| | | mm | 1397 | 2730 | 940 | 838 | 692 | 102 | 24-Φ51 | 1000 |

| 公称通径 DN(mm) Nominal diameter | | 900Lb | | | | | | | | | 重量(kg) Weight |
|---|---|---|---|---|---|---|---|---|---|---|---|
| mm | in | L | D | $D_1$ | $D_2$ | $D_8$ | b | z-Φd | H | $D_0$ | |
| 50 | 2 | 372 | 216 | 165.1 | 124 | 95.2 | 46 | 8-Φ25 | 521 | 300 | 69 |
| 65 | 21/2 | 422 | 244 | 190.5 | 137 | 108.0 | 49 | 8-Φ29 | 584 | 350 | 79 |
| 80 | 3 | 384 | 241 | 190.5 | 156 | 123.8 | 46 | 8-Φ25 | 648 | 350 | 115 |
| 100 | 4 | 461 | 292 | 235.0 | 181 | 149.2 | 52 | 8-Φ32 | 750 | 400 | 198 |
| 125 | 5 | 562 | 349 | 279.4 | 216 | 181.0 | 59 | 8-Φ35 | 800 | 500 | 303 |
| 150 | 6 | 613 | 381 | 317.5 | 241 | 211.1 | 64 | 12-Φ32 | 940 | 600 | 407 |
| 200 | 8 | 740 | 470 | 393.7 | 308 | 269.9 | 72 | 12-Φ38 | 1130 | 600 | 725 |
| 250 | 10 | 842 | 546 | 469.9 | 362 | 323.8 | 78 | 16-Φ38 | 1340 | 650 | 1091 |
| 300 | 12 | 969 | 610 | 533.4 | 419 | 381.0 | 87 | 20-Φ38 | 1543 | 700 | 1629 |

| 公称通径 DN(mm) Nominal diameter | | 1500Lb | | | | | | | | 重量(kg) Weight |
|---|---|---|---|---|---|---|---|---|---|---|
| mm | in | L | D | $D_1$ | $D_2$ | b | z-Φd | H~ | $D_0$ | |
| 50 | 2 | 368 | 216 | 165 | 92 | 47 | 8-Φ26 | 614 | 254 | 116 |
| 65 | 21/2 | 419 | 244 | 191 | 105 | 50 | 8-Φ29 | 705 | 356 | 166 |
| 80 | 3 | 470 | 267 | 203 | 127 | 56 | 8-Φ32 | 705 | 356 | 209 |
| 100 | 4 | 546 | 311 | 241 | 157 | 62 | 8-Φ35 | 927 | 457 | 296 |
| 125 | 5 | 673 | 375 | 292 | 186 | 82 | 8-Φ42 | 1120 | 610 | 508 |
| 150 | 6 | 705 | 394 | 318 | 216 | 93 | 12-Φ39 | 1191 | 610 | 720 |
| 200 | 8 | 832 | 483 | 394 | 270 | 104 | 12-Φ45 | 1524 | 711 | 1275 |
| 250 | 10 | 991 | 585 | 483 | 324 | 120 | 12-Φ51 | 1854 | 864 | 2092 |
| 300 | 12 | 1130 | 675 | 572 | 381 | 139 | 16-Φ54 | 2184 | 864 | 2951 |
| 350 | 14 | 1257 | 750 | 635 | 413 | 150 | 16-Φ61 | 2216 | 864 | 4382 |